Alutech United, Inc.
117 Dixon Street, Selbyville, DE 19975
302.436.6005
6620 19th Street E. Suite 103, Sarasota, FL 34243
941.355.0970

Storm Tex

Product Data Sheet

FEATURES

Storm Tex rolling hurricane screens are the premier choice for storm protection across residential, commercial, and retail settings. In addition to safeguarding against storms, **Storm Tex** screens provide immediate control over solar exposure, wind, privacy, insects, and overall comfort.

PRODUCT DATA

Max Width	288” (24 ft.)
Max Height	240” (20 ft.)
Header Box	6.5” | 7” | 8” | 9”
Zip Keder	11mm Zipper
Hembar	Self-Adjusting 3” | Mini 2”
Paint	7 Stocked Powder Coated Colors
Frame	3 Year Powder Coated Aluminum
Motor	Hammerhead | Somfy 110/120v Max | 5 amps | Manual Override Options - Emergency Crank
Warranty	5 Year Frame, Motor, & Electronics | 10 Year Fabric | 3 Year (Clear Vinyl)

SURFACE MOUNT

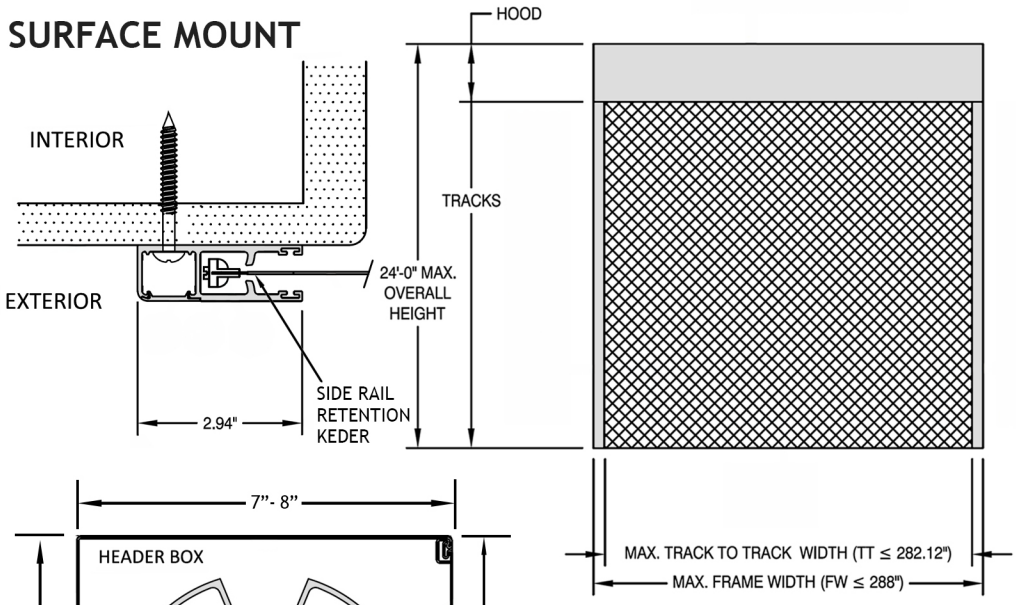

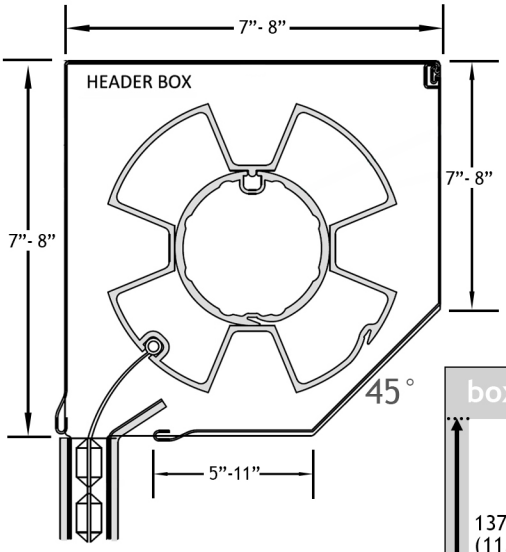

TRAP MOUNT

1/8” & 1/4” THICK x L x L 6063-T6 ALUMINUM TUBES ALSO QUALIFIED

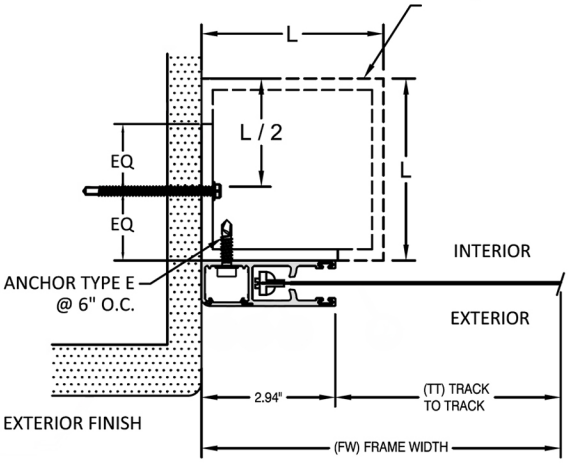

Frame Width 0ft-24ft

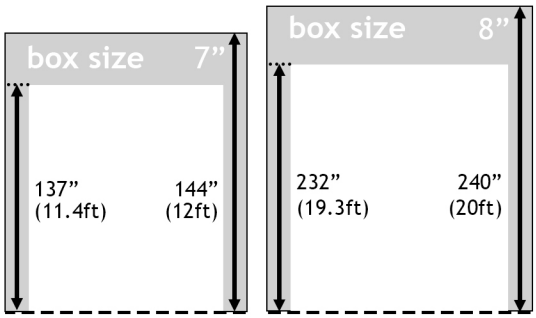

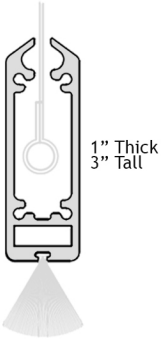

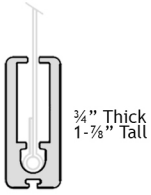

1” Rubber End Slat Option

¾” Bottom Brush Option

2” Bottom Brush Option

FABRIC INFORMATION

OMEGATEX™ TECHNICAL DATA

Attribute	ASTM	Warp	Fill	Typical
Construction	D3775-96	22.0 +/- 0.5	13.5 +/- 0.5	
Weight, oz/yd2	D3776-96			19.524
Tensile Strength (grab), lbf	D5034-95	711.3	748.9	
Tensile Strength (strip), lbf	D5035-95	416.7	251.4	
Elongation, %	D5035-95	42.8	12.3	
Abrasion Resistances	D3884-92	No exposure to core yarn	No exposure to core yarn	
Weatherability, 1200 hours	G53-96	Trace discoloration	Trace discoloration	
Bursting Strength, psi*	D3786			1250+
Puncture Resistance, lbf	D4833			364
Porosity Calculation				Open: 9% / Cover: 91%

MAX ALLOWABLE DESIGN PRESSURE		
FRAME WIDTH	POSITIVE	NEGATIVE
288.0	35.0	35.0
144.0	100.0	100.0
96.0	120.0	120.0

- State-of-the-art retractable hurricane protection
- Superior storm fabric protection with 50% Aramid fibers, offering near bulletproof durability
- Compliant with Florida and Texas Building Codes. Meets FBC, HVHZ / Miami Dade, TDI
- Provides a safe storage solution for furniture during storms

STORM & HURRICANE RATED

FABRIC COLOR OPTIONS

INSECT & SHADE
NON-RATED

nano™ 70

Attribute	ASTM	Warp	Fill	Typical
Construction, end/inch	D3775-12	23.0 ±0.5	21.0 ±0.5	
Weight, oz/yd²	D3776-09			9.3
Weight, g/m²	D3776-09			315.0
Tensile Strength (grab), lbf / daN	D5034-09	326.3 /1451.5	301.9 / 1343.0	
Tensile Strength (strip), lbf / daN	D5035-11	145.9 / 649.0	137.1 / 609.9	
Tear Strength (trapezoidal), lbf / daN	D5733	35.2 / 156.6	29.8 / 132.6	
Abrasion Resistance (CS10/500 cycles/ with no added weight)	D3884-09	No Exposure of Core Yarn		
Flammability Rating		CA TB 117-2013		
Weatherability, 1200 hours	G154	Trace Discoloration		
Mildew Resistance	G21-13	No growth		
Thickness, inches/mm	D1777-96			0.0212"/0.538 mm

nano™ 97

Attribute	ASTM	Warp	Fill	Typical
Construction, end/inch	D3775-17	36.0 ±0.5	34.0 ±0.5	
Weight, oz/yd²	D3776-09			14.7
Weight, g/m²	D3776-09			498.5
Tensile Strength (grab), lbf / daN	D5034-09	423.6 / 192.1	382.2 / 173.4	
Tensile Strength (strip), lbf / daN	D5035-11	218.5 / 99.1	188.4 / 85.5	
Tear Strength (trapezoidal), lbf / daN	D1117-99	58.4 / 26.5	42.2 / 19.1	
Abrasion Resistance (CS10/500 cycles/ with no added weight)	D3884-09	No Exposure of Core Yarn		
Flammability Rating		CA Title 19 & NFPA 701		
Weatherability, 1200 hours	G154-16	No Discoloration		
Mildew Resistance	G21-13	Pass		
Thickness, inches / mm	D1777-15			0.026 / 0.66

- See-through, no more dark rooms
- Perfect for protecting large openings
- Vinyl Coated Polyester Fabric Material

TEXTILENE® BRAND FABRIC

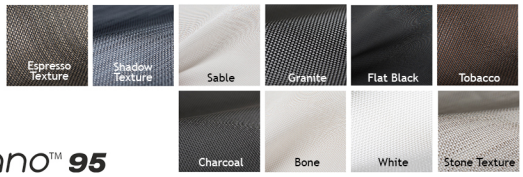

nano™ 95

Attribute	ASTM	Warp	Fill	Typical
Construction, end/inch	D3775-12	38 ±0.5	40.0 ±0.5	
Weight, oz/yd²	D3776-09			16.2
Weight, g/m²	D3776-09			549.3
Tensile Strength (grab), lbf / daN	D5034-09	414.3 / 184.3	409.2 / 182.0	
Tensile Strength (strip), lbf / daN	D5035-11	220.6 / 98.1	249.3 / 110.9	
Tear Strength (trapezoidal), lbf / daN	D5733	40.1 / 17.8	37.4 / 16.6	
Abrasion Resistance (CS10/500 cycles/ with no added weight)	D3884-09	No Exposure of Core Yarn		
Flammability Rating		CA Title 19 & NFPA 701		
Weatherability, 1200 hours	G154	Trace Discoloration		
Mildew Resistance	G21-13	No Growth		
Thickness, inches / mm	D1777-96			0.0275 / 0.699

CLEAR VINYL
NON-RATED

- Low Shrinkage/High Dimensional Stability
  - *ASTM Standard D1204: 0.1% Shrinkage*
- Flame Retardant Certified
  - *CFSM, NFPA 701*
- Cold Crack Resistant
  - *Up to -30°F*
- Anti-Fog
- Mildew Resistant
- UV Resistant
- Grade-A PVC Resin
- High Tensile & Tear Strength

REGISTERED STATE OF CALIFORNIA STATE FIRE MARSHAL FLAME RETARDANT F-10901

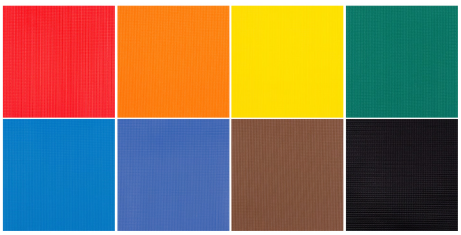

34+ WEBLON® Coastline Plus®
FABRIC BORDER COLOR OPTIONS

FRAME COLOR OPTIONS

Additional charges apply to some stocked colors; Additional charges apply to all custom colors
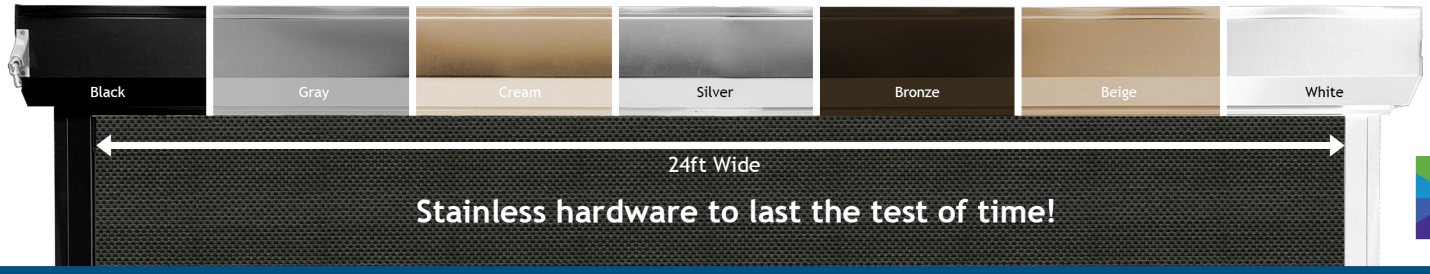
MAX WIDTH - 24FT | MAX HEIGHT - 20FT